Badger Meter Europa GmbH
Nürtinger Str. 76
72639 Neuffen (Germany)
Tel. +49-7025-9208-0
Fax +49-7025-9208-15
www.badgermeter.de
badger@badgermeter.de

ModMAG®
M-Series® | B-MAG Electromagnetic Flow Meters

Electromagnetic amplifier type ModMAG® M2000

for all detectors

Features

- Accuracy ±0,2% of m.v.
- Flow range 0,03 – 12 m/s
- DN6 – DN2000
- LCD display
- Power supply 85 – 265 VAC / 9 – 36 VDC
- IP67 housing
- ModBus®, HART, Profibus DP, M-Bus
- Integrated datalogger
- Verification device

Description

The amplifier type ModMAG® M2000 is best suited for bidirectional flow measurement of fluids with a conductivity > 5 µS/cm (> 20 µS/cm for demineralized water). ModMAG® M2000 shows a high accuracy, is easy to use and can be chosen for a large and flexible applications spectrum. The backlit, four-line display shows all actual flow measuring data, daily and complete information, including alarm messages. The standard amplifier has 4 programmable digital outputs, one digital input, power output and different interfaces. Integrated system self checkup make the putting into operation and the service easier. For service purposes, the meter configuration can be kept or transferred to another meter without a new parameterring via the optional back-up parameter function.

Measuring principle

The operating principle of the electromagnetic flow meter is based on Faraday's law of magnetic induction: The voltage induced across any conductor, as it moves at right angles through a magnetic field, is proportional to the velocity of that conductor. The voltage induced within the fluid is measured by two diametrically opposed internally mounted electrodes. The induced signal voltage is proportional to the product of the magnetic flux density, the distance between the electrodes and the average flow velocity of the fluid.

Dimensions

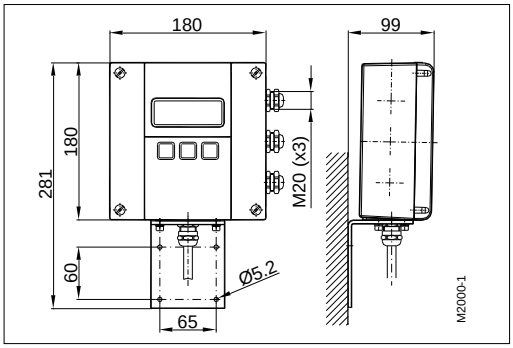

PROFIBUS®

Reprint of texts or text extracts requires prior written authorization of Badger Meter Europa GmbH.
Misuse of texts, pictures or company logo will be prosecuted.

Technical data

Power supply	85 – 265 VAC, 45 – 65 Hz, <20 VA or optional 9-36 VDC
Analog output	0/4 - 20 mA, ≤800 ohms, flow direction is displayed upon a separate status output
Pulse /Frequency output	24 V active, 20 mA, 30 V passive, 100 mA (open collector) max. 10 kHz
Status output	min/max. alarm, preselection meter, flow direction, error message
Medium control EPD	Separate electrode
Programming	3 keys
Interface	ModBus® RS232 /optional: RS485, HART, Profibus DP, M-Bus
Datalogger	Internal (optional) 32 MB/10.000 Data records
Flow range	0,03 – 12 m/s
Accuracy	±0,2% of mv ± 1mm/s
Repeatability	0,1%
Flow direction	bi-directional
Pulse length	Programmable up to 10 s
Outputs	Short circuit safe and galvanically isolated
Low flow cut off	0-10%
Parameter back-up function	Optional
Display	LCD, 4 lines / 20 characters, backlit, actual flow, 2 totalizers, status display
Housing	Powder coated aluminium die cast
Protection class	IP67
Cable insertion	Power and signal cable (outputs) 3 x M20
Signal cable	From detector M20
Ambient temperature	-20°C up to +60°C

*Improved accuracy by special calibration possible

Detector type II

Flange process connection

The electromagnetic detector type II is not only available in a number of different flange process connections (DIN, ANSI, JIS, AWWA, etc.) but also in a number of liners like hard rubber, soft rubber, PTFE, PFA or Halar. The detector is configurable with up to 4 electrodes for measuring, empty pipe and grounding electrodes. Available in sizes from DN 6 to DN 2000 and nominal pressures up to PN 100, the detector type II is best suited for a variety of applications in the industry and the water/waste water industry.

Technical data

Size	DN 6 – 2000 (1/4" ... 80")		
Process connections	Flange: DIN, ANSI, JIS, AWWA, etc		
Nominal pressure	up to PN 100		
Protection class	IP67, optional IP68		
Min. conductivity	5 µS/cm (20 µS/cm for demineralized water)		
Liner materials	Hard/soft rubber	from DN 25	0°C up to +80°C
	PTFE	DN 6 – 600	-40°C up to +150°C
	Halar (ECTFE)	from DN 300	-40°C up to +150°C
Electrodes materials	Hastelloy C (standard), Tantal Platinum / Gold plated, Platinum / Rhodium		
Housing	Steel / Optional stainless steel		
Lay length	DN 6 – 20		170 mm
	DN 25 – 50		225 mm
	DN 65 – 100		280 mm
	DN 125 – 200		400 mm
	DN 250 – 350		500 mm
	DN 400 – 700		600 mm
	DN 750 – 1000		800 mm
	DN 1200 – 1400		1000 mm

*Up to DN2000 upon request

Reprint of texts or text extracts requires prior written authorization of Badger Meter Europa GmbH.
Misuse of texts, pictures or company logo will be prosecuted.

Detector type II

Flange process connection

Remote version

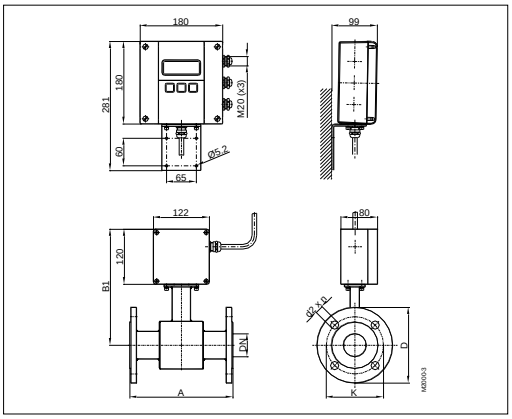

Mounted version

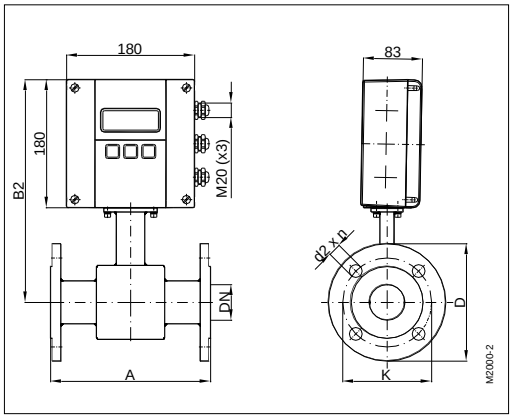

Dimensions

* Up to DN2000 upon request

DN		A Std*	A ISO**	B1	B2	with ANSI-flanges			with DIN-flanges		
						∅ D	∅ K	∅ d2xn	∅ D	∅ K	∅ d2xn
6	1/4"	170	---	228	288	88,9	60,3	15,9 x 4	90	60	14 x 4
8	3/10"	170	---	228	288	88,9	60,3	15,9 x 4	90	60	14 x 4
10	3/8"	170	---	228	288	88,9	60,3	15,9 x 4	90	60	14 x 4
15	1/2"	170	200	238	298	88,9	60,3	15,9 x 4	95	65	14 x 4
20	3/4"	170	200	238	298	98,4	69,8	15,9 x 4	105	75	14 x 4
25	1"	225	200	238	298	107,9	79,4	15,9 x 4	115	85	14 x 4
32	1 1/4"	225	200	253	313	117,5	88,9	15,9 x 4	140	100	18 x 4
40	1 1/2"	225	200	253	313	127	98,4	15,9 x 4	150	110	18 x 4
50	2"	225	200	253	313	152,4	120,6	19 x 4	165	125	18 x 4
65	2 1/2"	280	200	271	331	177,8	139,7	19 x 4	185	145	18 x 4
80	3"	280	200	271	331	190,5	152,4	19 x 4	200	160	18 x 8
100	4"	280	250	278	338	228,6	190,5	19 x 8	220	180	18 x 8
125	5"	400	250	298	358	254	215,9	22,2 x 8	250	210	18 x 8
150	6"	400	300	310	370	279,4	241,3	22,2 x 8	285	240	22 x 8
200	8"	400	350	338	398	342,9	298,4	22,2 x 8	340	295	22 x 12
250	10"	500	450	362	422	406,4	361,9	25,4 x 12	395	350	22 x 12
300	12"	500	500	425	485	482,6	431,8	25,4 x 12	445	400	22 x 12
350	14"	500	550	450	510	533,4	476,2	28,6 x 12	505	460	22 x 16
400	16"	600	600	475	535	596,9	539,7	28,6 x 16	565	515	26 x 16
450	18"	600	---	500	560	635,0	577,8	31,7 x 16	615	565	26 x 20
500	20"	600	---	525	585	698,5	635,0	31,7 x 20	670	620	26 x 20
550	22"	600	---	550	610	749,3	692,1	34,9 x 20	---	---	---
600	24"	600	---	588	648	812,8	749,3	34,9 x 20	780	725	30 x 20
650	26"	600	---	613	673	869,9	806,4	34,9 x 24	---	---	---
700	28"	600	---	625	685	927,1	863,6	35,1 x 28	895	840	30 x 24
750	30"	800	---	650	710	984,2	914,4	34,9 x 28	---	---	---
800	32"	800	---	683	743	1060,5	977,9	41,3 x 28	1015	950	33 x 24
850	34"	800	---	708	768	1111,2	1028,7	41,3 x 32	---	---	---
900	36"	800	---	725	785	1168,4	1085,8	41,3 x 32	1115	1050	33 x 28
950	38"	800	---	750	810	1238,3	1149,4	41,3 x 32	---	---	---
1000	40"	800	---	790	850	1346,2	1257,3	41,3 x 36	1230	1160	36 x 28
1200	48"	1000	---	900	960	1511,5	1422,4	41,3 x 44	1455	1380	39 x 32
1350	54"	1000	---	975	1035	1682,8	1593,9	47,8 x 44	---	---	---
1400	56"	1000	---	1000	1060	---	---	---	1675	1590	42 x 36

Standard		
with ANSI-flanges	from DN 6 - 1400	pressure rate 150 lbs
with DIN flanges	from DN 6 – 200	pressure rate PN 16
	from DN 250 – 1400	pressure rate PN 10

* Standard **ISO 13359

Reprint of texts or text extracts requires prior written authorization of Badger Meter Europa GmbH.
Misuse of texts, pictures or company logo will be prosecuted.

Detector type III

Wafer connection

Mounted version

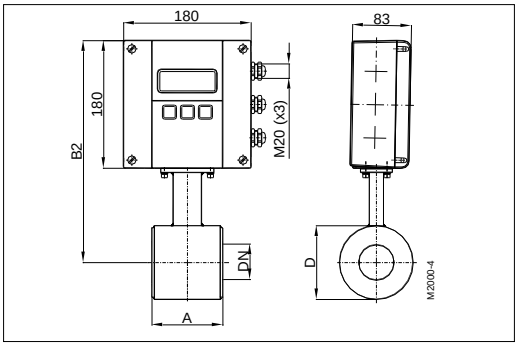

Remote version

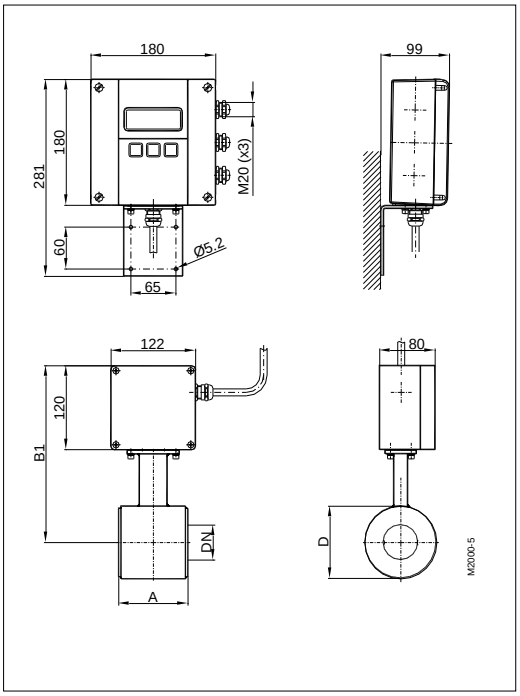

Thanks to its very short lay length, the detector type III is often the right alternative to a lot of applications. Delivered with a PTFE liner, the detector type III has a standard nominal pressure of PN 40.

Technical data

Size	DN 25 – 100 (1" ... 4")	
Process connection	Wafer connection (in-between flange mounting)	
Nominal pressure	PN 40	
Protection class	IP67, optional IP68	
Min. conductivity	5 µS/cm (20 µS/cm for demineralized water)	
Liner materials	PTFE	Liner materials
Electrodes materials	Hastelloy C (Standard) Tantal Platinum / Gold plated Platinum / Rhodium	
Housing	Carbon steel / optional stainless steel	
Lay length	DN 25 – 50	100 mm
	DN 65 – 100	150 mm

Dimensions (mm)

DN		A	B1	B2	D
25	1"	100	238	184	74
32	1 ¼"	100	243	189	84
40	1 ½"	100	248	194	94
50	2"	100	253	199	104
65	2 ½""	150	266	212	129
80	3"	150	271	217	140
100	4"	150	279	225	156
PN 40					

Reprint of texts or text extracts requires prior written authorization of Badger Meter Europa GmbH.
Misuse of texts, pictures or company logo will be prosecuted.

Sanitary detector for Food

Process connections Tri-Clamp® BS4825/ISO2852, DIN 11851, etc.

DIN 11851 remote mounted

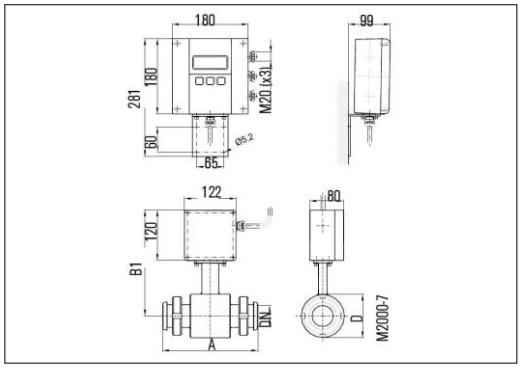

DIN 11851 mounted version

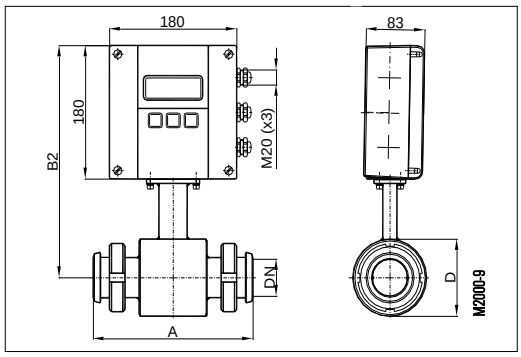

The sanitary detector was developed for the flow measurement of liquid food. This model is available with Tri-Clamp® BS4825/ISO2852, DIN11851, etc. process connections and also with any special connections (customer specifications).The sanitary detector is delivered in a stainless steel housing and with PTFE/PFA lining.

Technical data

Size	DN 10 - 100 (3/8" ... 4")		
Process connections	Tri-Clamp® BS4825/ISO2852, DIN 11851, etc.		
Nominalpressure	PN 10/16		
Protection class	IP67, optional IP68		
Min. conductivity	5 µS/cm (20 µS/cm for demineralized water)		
Liner materials	PTFE/PFA	-40°C to +150°C	
Electrodes materials	Hastelloy C (Standard) Tantal Platinum / Gold plated Platinum / Rhodium		
Housing	Carbon steel / optional stainless steel		
Lay length	Tri-Clamp® connection	DN 10 – 50	145 mm
		DN 65 – 100	200 mm
	DIN 11851 connection	DN 10 – 20	170 mm
		DN 25 – 50	225 mm
		DN 65 – 100	280 mm

Type Food DIN 11851

DN		A	B1	B2	D
10	3/8"	170	238	184	74
15	1/2"	170	238	184	74
20	3/4"	170	238	184	74
25	1"	225	238	184	74
32	1 ¼"	225	243	189	84
40	1 ½"	225	248	194	94
50	2"	225	253	199	104
65	2 ½"	280	266	212	129
80	3"	280	271	217	140
100	4"	280	279	225	156
PN 16	dimensions (mm)				

Reprint of texts or text extracts requires prior written authorization of Badger Meter Europa GmbH.
Misuse of texts, pictures or company logo will be prosecuted.

TriClamp® mounted version

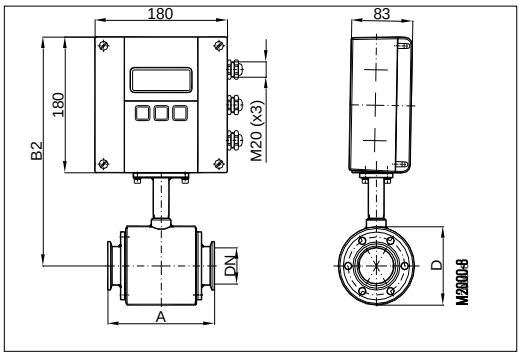

TriClamp® remote mounted

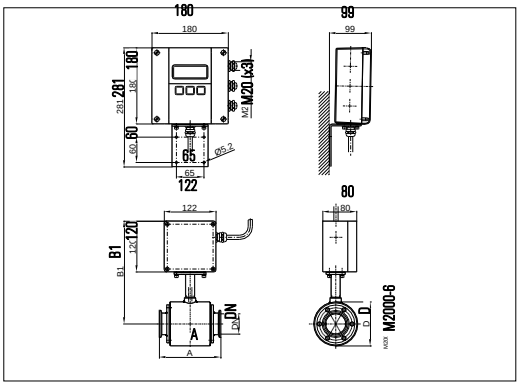

Type Food Tri-Clamp® BS4825/ISO2852

BS4825			ISO2852		
Size	AD	ID	DN	AD	ID
-	-	-	10	50.5	14.0
1/2"	25.0	9.4	15	50.5	18.1
3/4"	25.0	15.75	20	50.5	22.9
1"	50.5	22.1	25	50.5	28.7
1 ½"	50.5	34.8	32	64.0	38.4
2"	64.0	47.5	40	64.0	44.3
2 ½"	77.5	60.2	50	77.5	56.3
3"	91.0	72.9	65	91.0	72.1
3 ½"	106.0	84.3	80	106.0	84.3
4"	119.0	97.4	100	130.0	109.7
PN 10	dimensions (mm)				

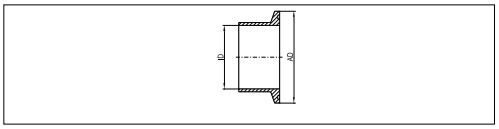

Dimensions (mm) type Food Tri-Clamp®

DN		A	B1	B2	D
10		145	228	191	74
15	1/2"	145	228	191	74
20	3/4"	145	228	191	74
25	1"	145	228	191	74
40	1 ½"	145	238	201	94
50	2"	145	243	206	104
65	2 ½"	200	256	219	129
80	3"	200	261	224	140
100	4"	200	269	232	156
PN 10					

Reprint of texts or text extracts requires prior written authorization of Badger Meter Europa GmbH.
Misuse of texts, pictures or company logo will be prosecuted.